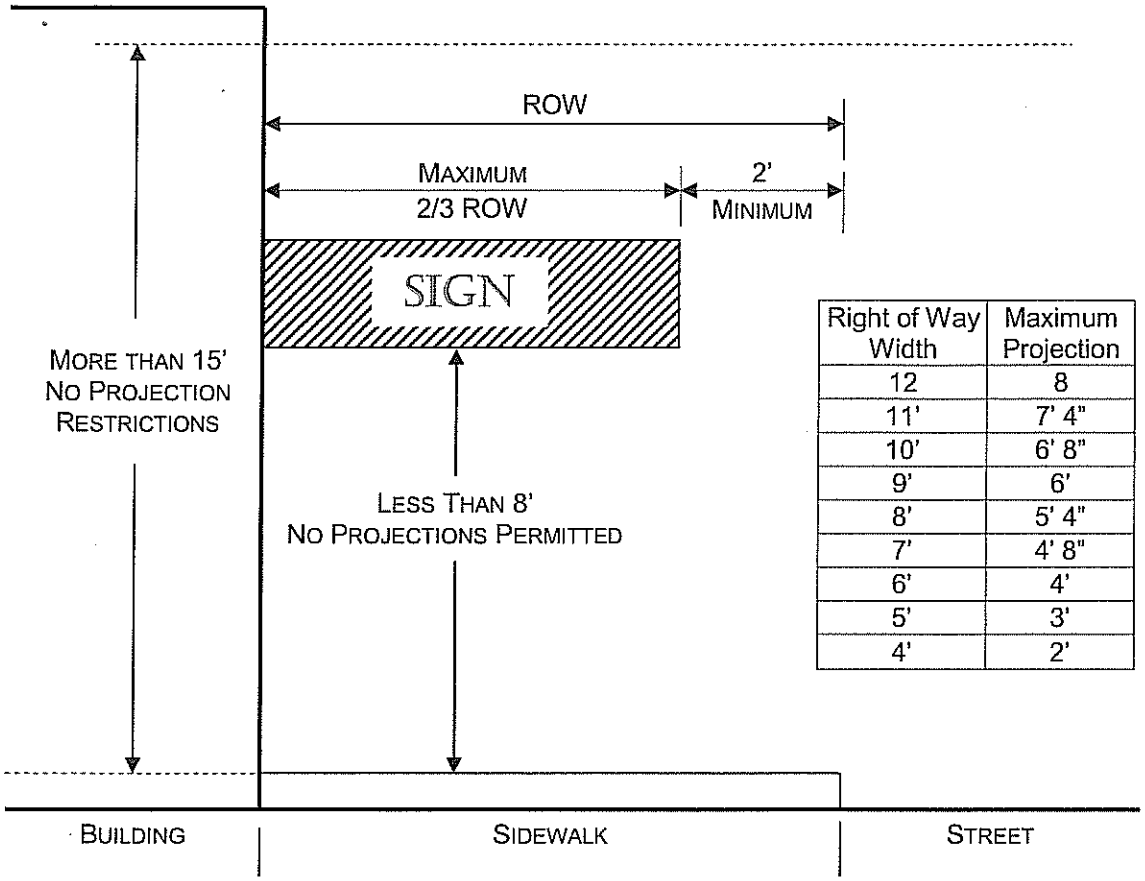

Right of Way Width	Maximum Projection
12	8
11'	7' 4"
10'	6' 8"
9'	6'
8'	5' 4"
7'	4' 8"
6'	4'
5'	3'
4'	2'

PROJECTION OF SIGNS § 3202.3
2007 CBC

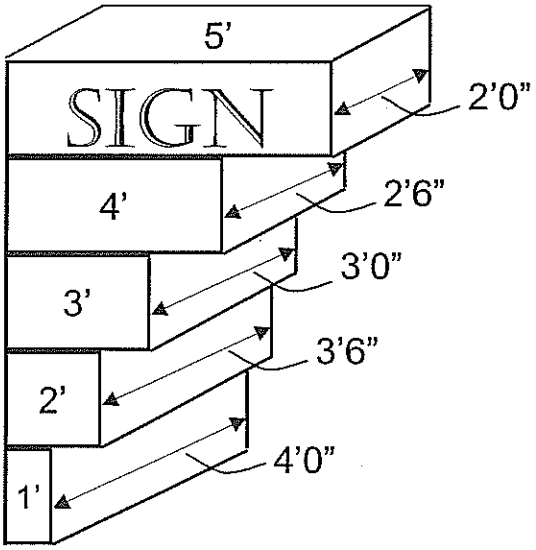

THICKNESS OF PROJECTION SIGN § H114 TABLE 4-B
2007 CBC

Revised 02-04-08